TECEbox – 9 370 503

WM-022022
AS 1172.2

WATER RATING www.waterrating.gov.au 3.3 litres average flush 4.5 L per flush / 3 L per half flush In accordance with AS/NZS 6400:2016 Licence No. 1099 TECE GmbH

WATER RATING www.waterrating.gov.au 3.5 litres average flush 6 L per flush / 3 L per half flush In accordance with AS/NZS 6400:2016 Licence No. 1099 TECE GmbH

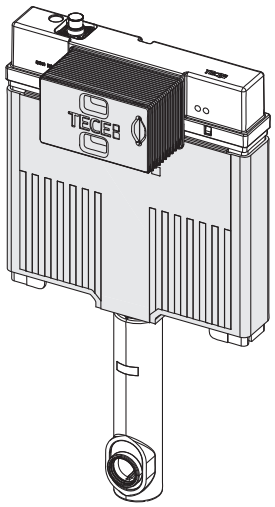

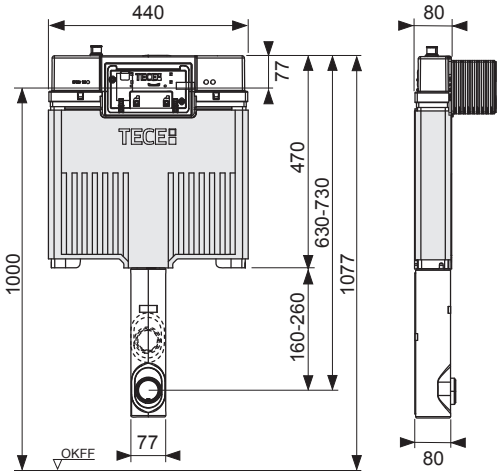

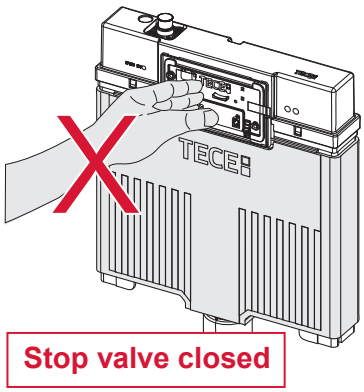

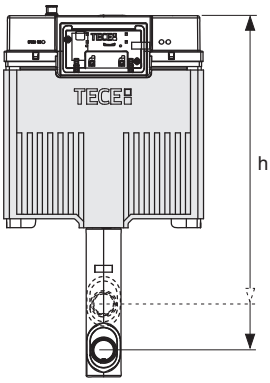

630 < h < 730 – next step
h = 730 – next step see page 2 or 3

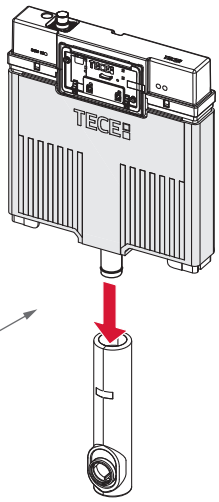

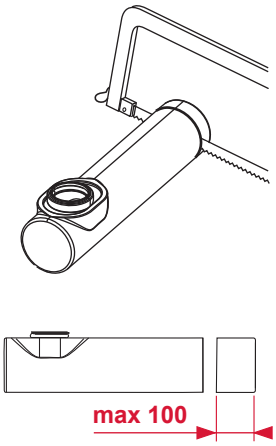

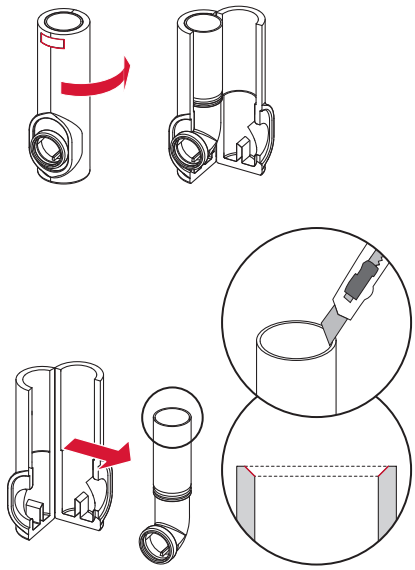

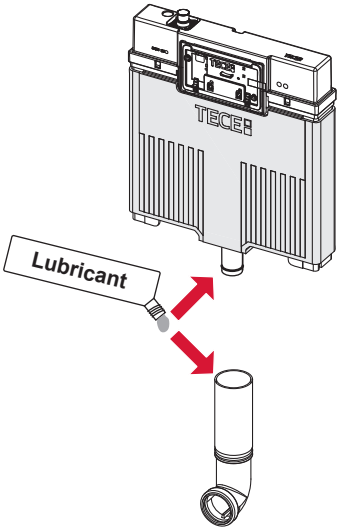

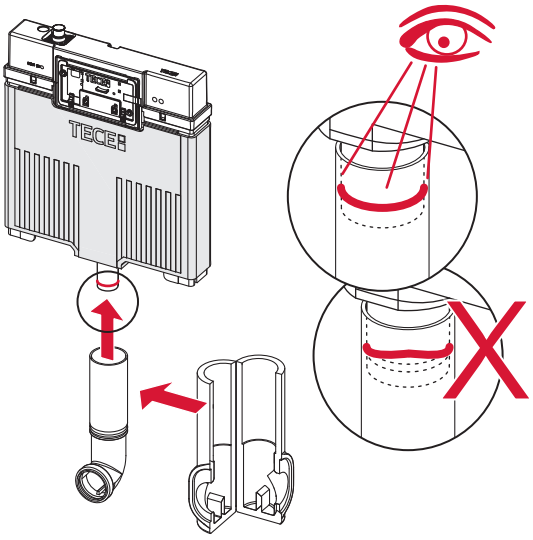

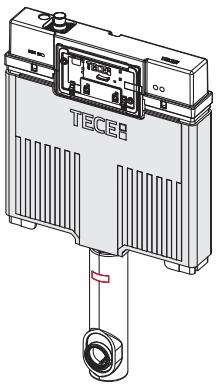

TECEbox – 9 370 503

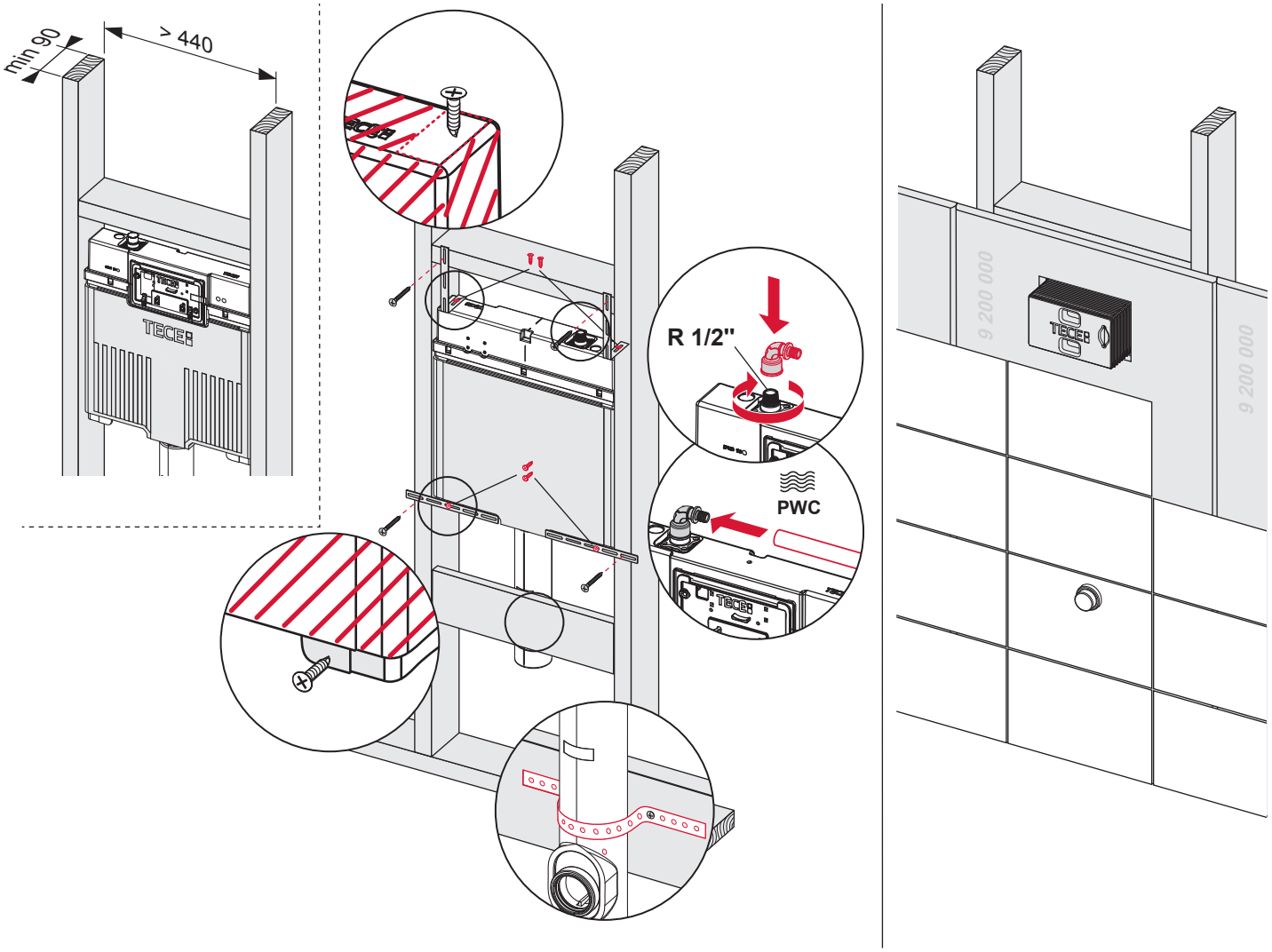

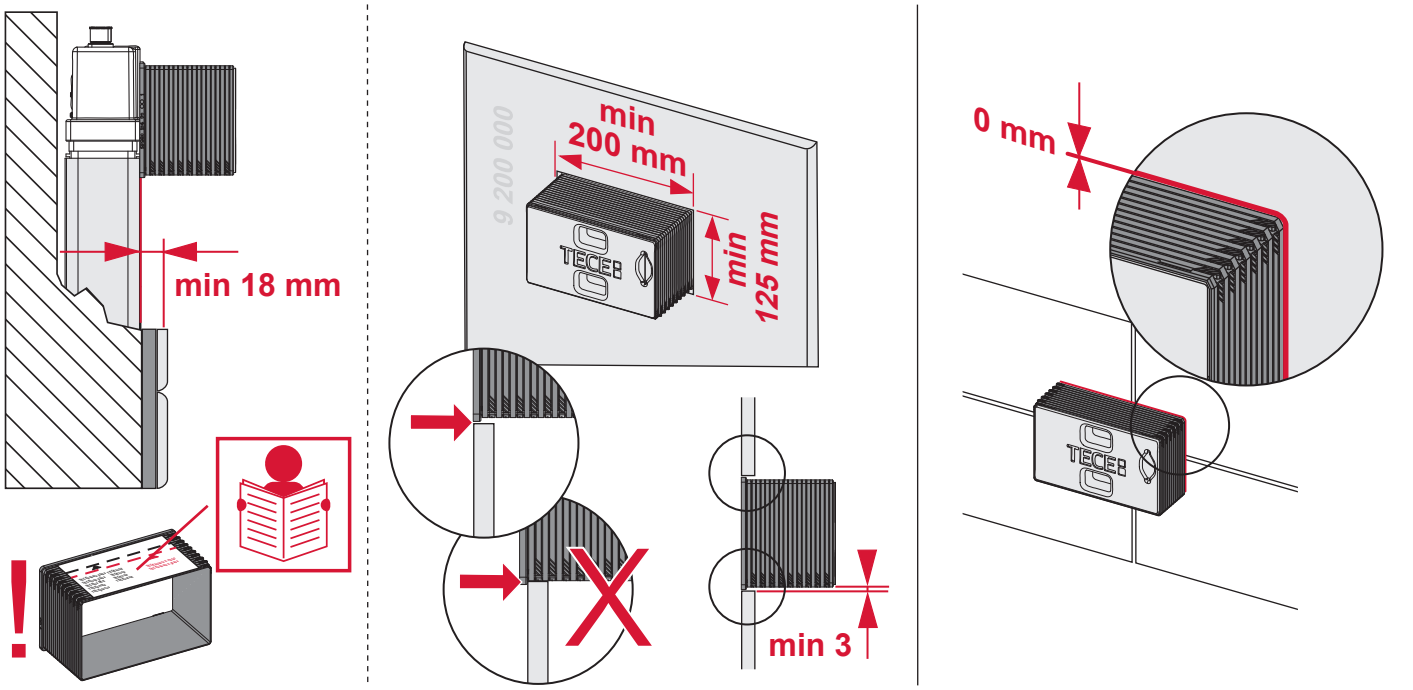

TECEbox – 9 370 503

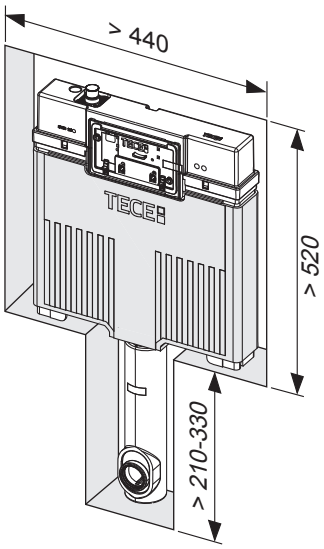

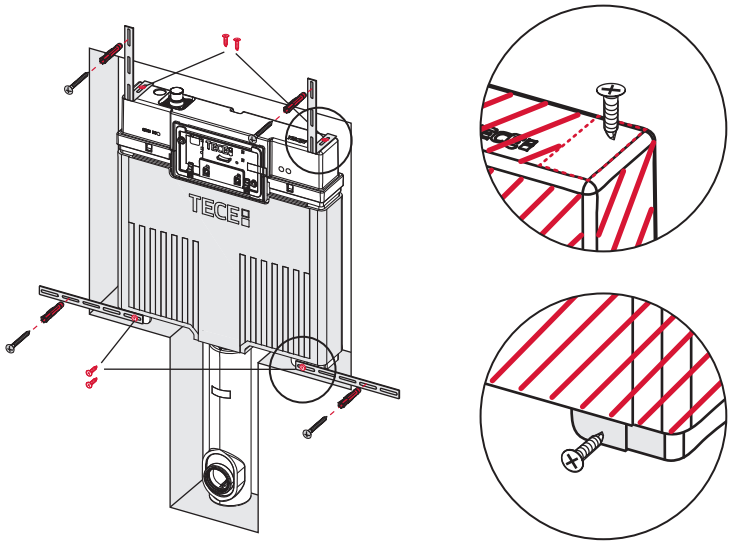

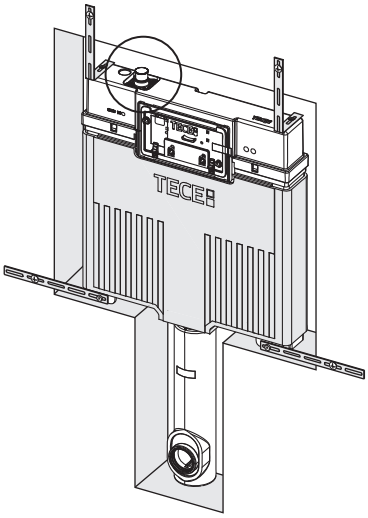

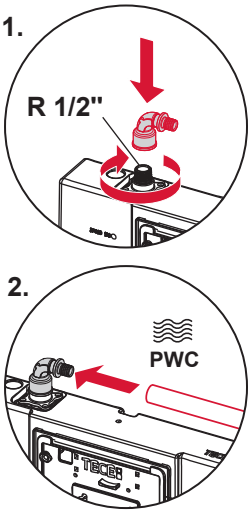

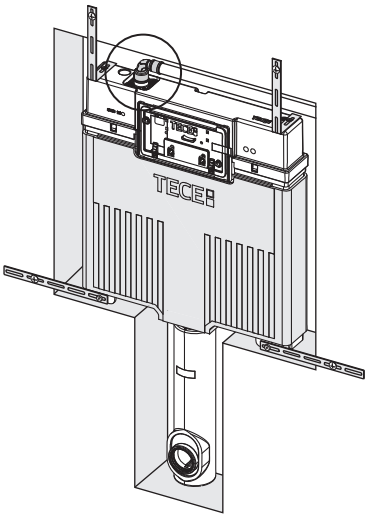

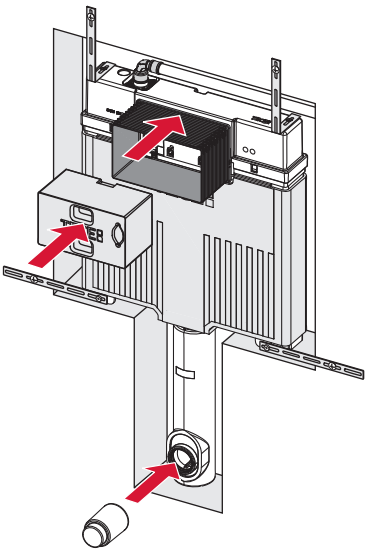

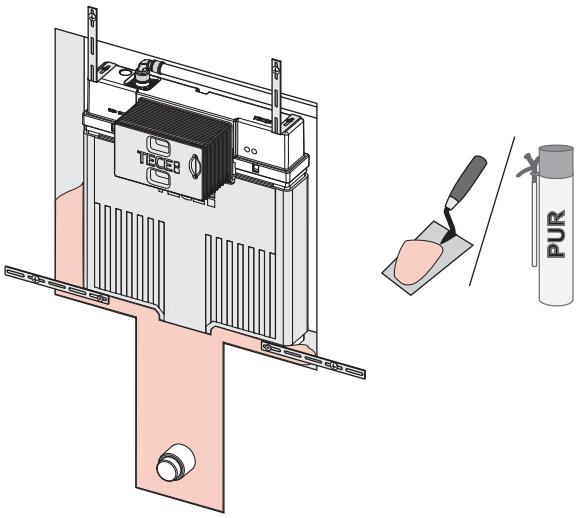

TECEbox – 9 370 503

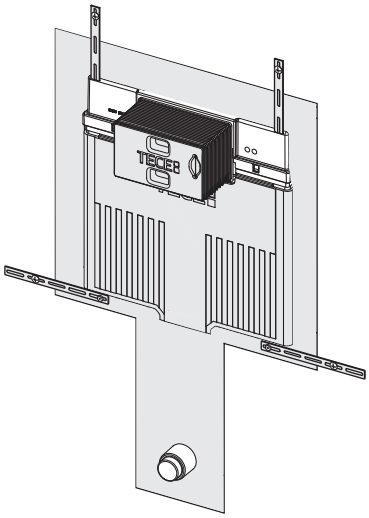

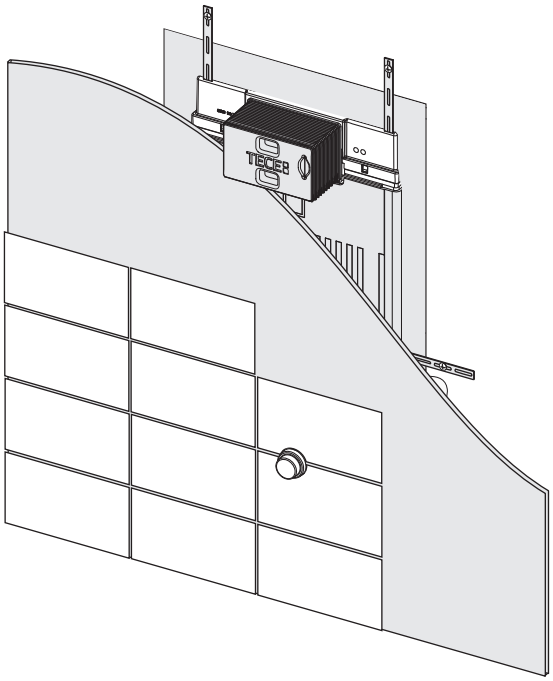

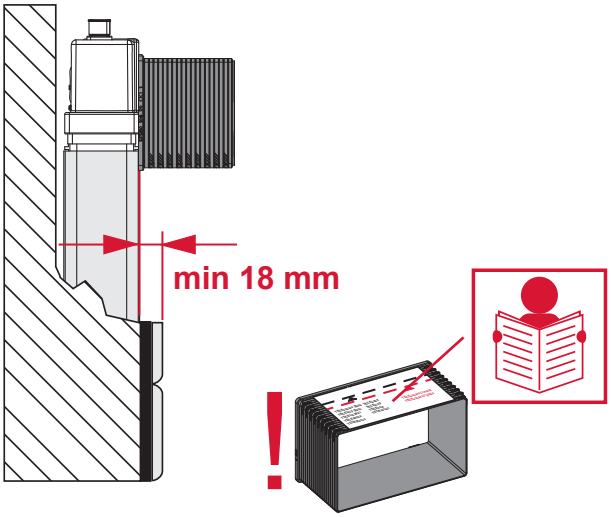

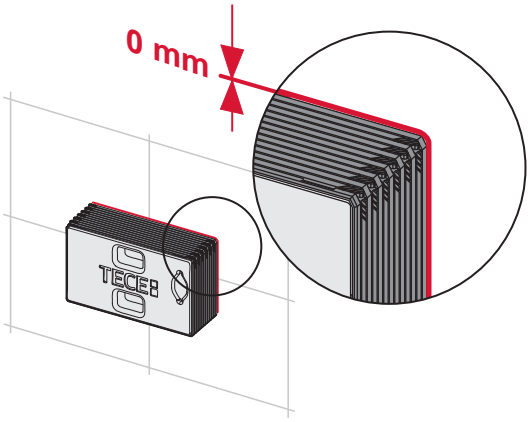

PR230 439 00 e